Electrotactile Improves Thermal Referral

Wen Li
University of Chicago
Chicago, Illinois, USA
wenli@uchicago.edu

Rong Ni
University of Chicago
Chicago, Illinois, USA
rongn@uchicago.edu

Bozhi Tian
University of Chicago
Chicago, Illinois, USA
btian@uchicago.edu

Pedro Lopes
University of Chicago
Chicago, Illinois, USA
pedrolopes@uchicago.edu

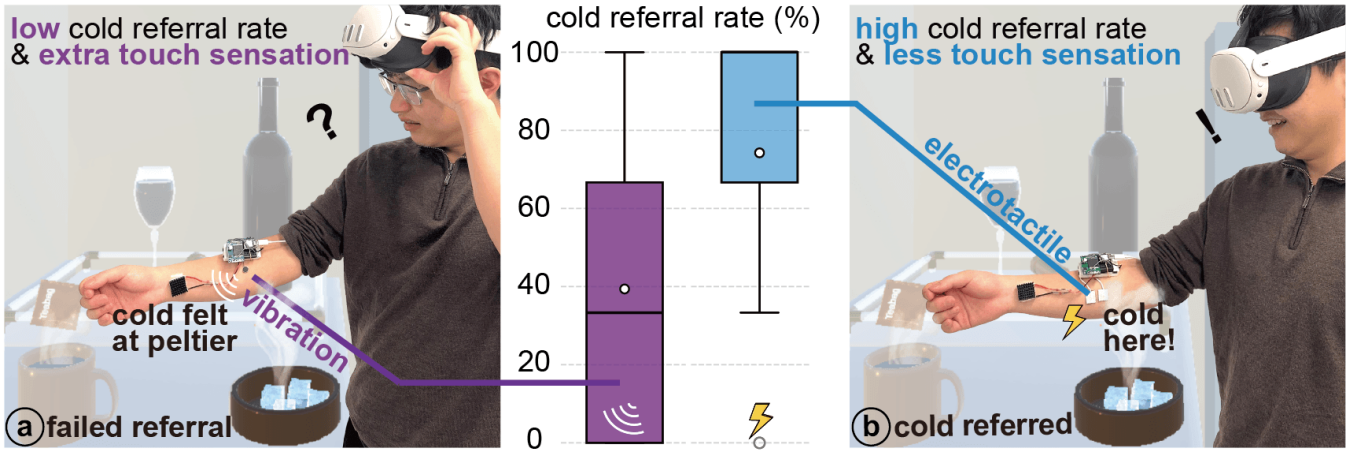

Figure 1: Thermal referral emerged as a popular technique to minimize the number of thermal actuators needed by swapping some with smaller and less power-hungry vibrotactile actuators. In this technique the vibration motors redirect nearby thermal sensations to the vibration motor's location. However, despite the rapid expansion of this technique in HCI, we unveiled critical challenges that limit its interactive applicability: (1) thermal referral struggles to reliably produce cold referral, and (2) the distracting tactile "buzz" from vibration motors makes it unsuitable for simulating non-contact thermal sources. Thus, we propose a methodological shift from vibrotactile to *electrotactile* stimulation. Our results confirmed this significantly improves cold referral rates and thermal quality.

Abstract

Thermal referral enables thermal sensations in locations lacking thermal actuators—this is achieved using vibrotactile actuators to redirect a nearby thermal sensation to where a tactile sensation is applied. However, we found that its reliance on vibration introduces critical limitations: it struggles to produce cold referral, and the inherent strong tactile "buzz" makes it unsuitable for simulating non-contact thermal events, such as the chill of an open freezer in VR (in contrast to contact-based thermal events like touching the freezer's cold handle). To improve this, we propose a shift from vibrotactile to electrotactile-based thermal referral. We evaluated in two user studies—a psychophysics experiment (N=22) and a VR deployment (N=20)—where we contrasted electrotactile with vibrotactile-based thermal referral. Our results reveal key advantages of the electrotactile-based thermal referral: (1) increases the referral rate for cold sensations; (2) increases thermal perception while minimizing tactile; and (3) improves realism across a range of VR thermal scenarios, specifically distinguishing between contact-based and non-contact thermal events. Finally, we provide design guidelines for choosing tactile cues to create immersive multi-modal thermal experiences in VR.

CCS Concepts

• **Human-centered computing → Haptic devices**.

Keywords

Haptics, electrotactile, thermal referral, virtual reality

This work is licensed under a Creative Commons Attribution 4.0 International License.

UIST '26, Detroit, MI, USA

© 2026 Copyright held by the owner/author(s).

ACM ISBN 979-8-4007-2856-3/26/11
https://doi.org/10.1145/3830398.3830581

ACM Reference Format:
Wen Li, Rong Ni, Bozhi Tian, and Pedro Lopes. 2026. Electrotactile Improves Thermal Referral. In *The 39th Annual ACM Symposium on User Interface Software and Technology (UIST '26), November 02–05, 2026, Detroit, MI, USA.* ACM, New York, NY, USA, 12 pages. https://doi.org/10.1145/3830398.3830581

1 INTRODUCTION

Spatially distributed thermal feedback can make wearable and immersive interfaces more expressive, but scaling such feedback typically requires adding thermal actuators at every possible output location. Because these actuators are comparatively bulky and power-hungry, increasing their number limits wearability. *Thermal referral* offers an alternative: when tactile stimulation is applied near a thermal actuator, users can perceive the temperature at the tactile location rather than at its physical source [40]. By decoupling the physical and perceived locations of thermal output, this illusion enables interfaces to cover more body locations with fewer thermal actuators.

Recent interactive systems have begun using thermal referral as an actuation technique for localized, moving, and object-coupled thermal feedback in wearable and immersive interfaces [3, 29–31, 39, 40, 43]. Across these systems, the standard implementation is based on vibrotactile actuators (e.g., ERM or LRA motors) to anchor the referred thermal sensation.

While effective for specific scenarios—such as simulating contact heat where a user expects a physical contact sensation (e.g. feeling hot water splash one's hand [39])—we will demonstrate, via the findings of our two experiments, that relying on mechanical vibration introduces two critical limitations that hinder broader application of thermal referral in interactive domains, such as VR. First, vibrotactile thermal referral is unreliable for cold output: prior work found its occurrence rate to be approximately 20% lower for cold than for heat [40]. In an interactive system, such failures produce a mismatch between the intended output location and the user's perception, breaking immersion. Second, vibration adds an unavoidable tactile "buzz" to the thermal percept. Although this cue can be congruent with contact events, such as touching a hot object, it conflicts with non-contact events, such as feeling heat from a fireplace or cold air from an ice source, as shown in Figure 1. Thus, vibrotactile referral cannot cleanly distinguish thermal events that imply contact from those that do not.

We overcome these limitations by proposing a novel thermal referral via *electrotactile stimulation,* as depicted in Figure 1 (b). We evaluated this approach in two studies. Our first study providerd a controlled psychophysics setting (N=22) that compared vibrotactile and electrotactile referral across modality and intensity, demonstrating that electrotactile stimulation substantially improves cold referral and that threshold-level stimulation can reduce the accompanying tactile sensation (our vibrotactile baseline also provides a partial replication of prior thermal-referral findings [40]). Our second study (N=20) examined how these perceptual differences affect four contact and non-contact thermal interactions in VR. Together, this work contributes: (1) electrotactile thermal referral as an alternative actuation technique for spatial thermal interfaces; (2) a wearable, interactive implementation and empirical characterization of tactile modality and intensity; and (3) design guidance for matching tactile cues to the semantics of contact and non-contact thermal events.

2 RELATED WORK

The work presented in this paper builds primarily on the broadly defined field of haptics (i.e., thermal included), with particular emphasis on the emergence of thermal referral in HCI as a promising technique for thermal rendering. Finally, since our approach substitutes mechanical vibration with electrotactile, we succinctly review the field of electrotactile.

2.1 Thermal referral effect

A *thermal referral* is a type of illusion that perceptually displaces a thermal sensation to the location where a tactile stimulus is delivered—i.e., the thermal sensation is thus *referred* to the location of the tactile stimulus, giving rise to the term "thermal referral" [8, 10]. This effect recently rose to prominence in HCI [3, 29–31, 39, 40, 43] by providing a powerful way to minimize the number of *thermal* actuators (i.e., by swapping some thermal actuators with smaller and less power-hungry tactile actuators). This technique is in line with a larger trend in haptics arguing for less cumbersome actuators, without sacrificing their actuation capabilities [2, 23, 35]. Thermal referral has thus been explored to enable more and energy-efficient thermal interfaces [39].

2.2 Vibration dominates thermal referral

While the choice of tactile actuators for thermal referral has varied slightly, the vast majority uses *mechanical stimulation*, with vibration motors (e.g. linear resonant actuators or eccentric rotating mass motors) as the standard actuator for thermal referral HCI [20, 29–31, 39, 40, 43].

Examples of vibrotactile-based thermal referral include: Son et al.'s upper body thermal referral vest using vibrotactile masking to induce localized thermal feedback on the torso [31]; *Thermal Masking* [40], a systematic investigation of vibrotactile-based thermal referral; *Fiery Hands* [39], a thermal glove integrating vibrotactile and thermal feedback for virtual object manipulation; *Thermicvibro* [43], a multimodal haptic glove coupling vibration with thermal actuation to enable dynamic thermal sensations during VR interaction; and *Thermal In Motion* [30] and *HeatFlow* [29] leveraging thermal referral to create moving thermal cues.

While other mechanical actuators such as microblowers (*ThermoCaress* [20]) have been used in thermal referral, these are strikingly less common than vibrotactile actuators. This is likely a consequence of vibrotactile stimulation being a popular choice for rendering touch sensations, with vibration motors commonly integrated across haptic devices like vests [18, 19, 31] or gloves [39, 43].

2.3 Limits of vibrotactile-based thermal referral

Implementing thermal referral with vibration introduces psychophysical limitations. First, the reliability of the illusion is asymmetric. Prior work noted that while heat is referred reliably, cold referral rates are strikingly 20% lower [40]. The prevailing hypothesis attributes this to the distribution of thermoreceptors. As cold receptors outnumber warm receptors, the thermal redistribution among thermal and tactile actuator areas is thought to be less effective [10, 21]. While this could account for some differences between hot and cold referral, our findings will demonstrate it might not be a complete explanation.

Second, vibration motors for thermal referral create feelable mechanical vibrations on the skin, i.e., they "buzz" and create a sensation that users interpret as a "touch". While this extra tactile percept is acceptable for simulating contact thermal events (e.g., touching a warm cat [43] or hot water [39]), it creates a sensory conflict when simulating non-contact thermal events (e.g., ambient/radiant thermal sources like an open freezer or a fireplace). Our work addresses these issues by replacing the vibration actuators with electrotactile stimulation.

2.4 Electrotactile stimulation

Electrotactile stimulation renders tactile sensations by passing currents via the skin. It has been widely explored for its ability to deliver tactile sensations in extremely compact form factors, such as fingertip displays [13, 17, 33, 41], sensory substitution [7, 34, 36], and popularly, to render touch in virtual environments [11, 28, 32, 37, 38, 42]. Unlike vibration, electrotactile stimulation has no moving parts (enabling extremely thin form factors [33, 41]) and generates almost no heat loss (hailed for its extremely low-power consumption compared to vibrotactile [28]).

Importantly, the sensations induced by electrotactile can be modulated by varying parameters such as pulse width, frequency, intensity, and polarity [1, 5, 12, 13, 16]. Variations of these enable selective stimulation of many mechanoreceptors (including Merkel disks, Meissner corpuscles, Pacinian corpuscles and Ruffini endings) [14], and a range of sensations from subtle tingling to pressure [5]. Prior studies have reported electrotactile-induced cold sensations under specific conditions. Electrotactile stimulation induced cold sensations on the forehead [26], potentially because the forehead has greater cold sensitivity than the forearm [27]. Another study extended this effect to the arm by applying gel or anesthetics [25], potentially by activating myelinated A-δ afferents and suppressing competing sensations mediated by other nerve fibers. These studies demonstrated that electrotactile stimulation can directly induce cold sensations under specific conditions. But as we note in our study, none of our participants reported feeling cold sensations during the extensive electrotactile calibrations. One prior work has combined electrotactile stimulation with thermal actuators in a single device for delivering co-located thermal/tactile feedback [11]. However, electrotactile has never been investigated as a tactile source for thermal referral—this is one of our contributions. We hypothesized that the ability of electrotactile stimulation to recruit a range of mechanoreceptors offers an alternative pathway to trigger thermal referral that does not rely on mechanical vibrations.

3 Implementation: electrotactile + thermal

Our main hardware prototype, depicted in Figure 2, was a wearable version designed to trigger thermal referral via a combination of peltier (thermal) and electrotactile stimulation (tactile). In the study, participants wore only the electrodes and the peltier; the remainder of the hardware shown in Figure 2 sat on a table to minimize attachment time and mitigate risk of wearables loosening up during studies. To help readers replicate our design, we provide technical details in an open-source repository[1].

[1] https://lab.plopes.org/#electro-thermal-referral

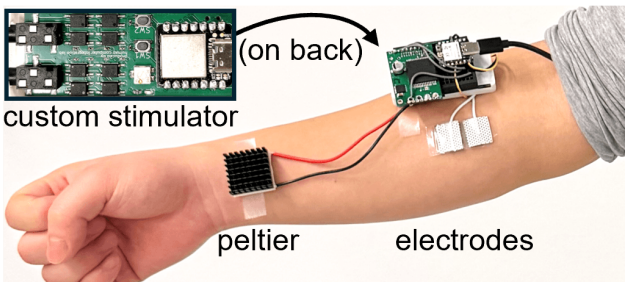

Figure 2: Our hardware prototype attached to a user's arm.

Logic control. We developed a compact wearable prototype using a WiFi-enabled *ESP32-C3* microcontroller (*Seeed*) to coordinate a peltier element for thermal output and our custom-built electrotactile stimulator for tactile output. The microcontroller listens to WiFi OSC commands sent from VR applications (our implementations run in *Unity3D*) and activates the peltier and electrotactile stimulator in real time, enabling thermal referral during interactive VR experiences. Our device is powered by a power bank in the user's pocket.

Thermal control. The schematic representation of our implementation is depicted in Figure 3. To drive our peltier element (25 × 25 mm) we utilize an h-bridge (*ST VNH5019A*).

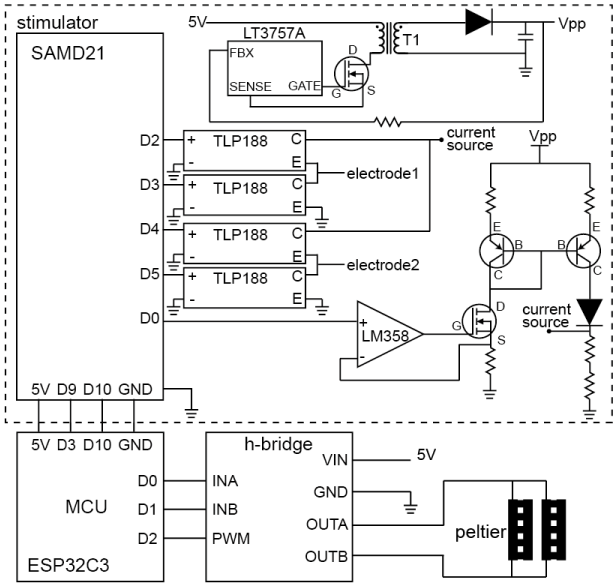

Figure 3: High-level schematic of our device's circuitry.

Electrotactile control. To generate electrotactile stimulation, we implemented a custom and self-contained stimulator. At its core, our stimulator is controlled by an *SAMD21* microcontroller (*Seeed*) as it provides a DAC, which we utilize for programmatic analog control of the stimulator's output current. The microcontroller drives an *LT3757A*-based boost converter that steps up the 5 V USB supply to a high-voltage rail. The stimulation current is regulated by an op-amp (*LM358*) feedback loop that controls

a high-voltage MOSFET, establishing a precise reference current. This reference is replicated to the output via a PNP current mirror (matched *FCX705TA* transistors), ensuring consistent delivery regardless of impedance variations. The stimulation is routed to the electrodes through optocoupler-based h-bridges (*TLP188*), which implement biphasic polarity switching to produce the AC square waveform required for proper electrotactile stimulation [12]. For additional safety, the current is capped by a current limiting diode. Finally, electrotactile stimulation is delivered through pre-gelled electrodes placed on the forearm.

4 Overview of Studies

We conducted two user studies to validate the benefits of switching from vibrotactile to electrotactile for thermal referral. To the best of our knowledge, our studies are the first to explore the use of electrotactile stimulation for thermal referral. In our **first study (psychophysics)**, we assessed how effective electrotactile is in thermal referral compared to vibration. We found that participants reported (1) a higher cold referral rate under electrotactile; and (2) a higher thermal intensity in both hot and cold conditions with electrotactile. In our second **study (VR deployment),** participants experienced four different scenes (non-contact heat, contact heat, non-contact cold and contact cold) and compared vibration-based thermal referral to electrotactile-based thermal referral. We found that using electrotactile stimulation, participants rated significantly higher realism in non-contact heat, non-contact cold and contact cold. Both of these studies were approved by our local ethics committee (*IRB22-0228*).

4.1 Experimental Apparatus

Both studies used our laboratory apparatus designed for precise stimulus control. The apparatus shares all the core hardware from our wearable prototype (see *Implementation*) but, for stability and proper control, was implemented in a stationary circuit (on the desk rather than worn).

Thermal stimulation: As in our wearable prototype, thermal stimulations are delivered via a peltier actuator (40 × 40 × 10 mm, rated at 12 V). For additional stability and control of the cold stimulation, we added a heat sink and cooling fan for heat dissipation, as is typical of thermal research [22]. The peltier was attached to participants left forearm (ventral side) and secured with medical-grade tape. The peltier was programmed to deliver cold (-5 °C) or hot (+3 °C) stimuli relative to each participant's baseline skin temperature based in prior work [40]; these temperatures were measured by a thermistor (0.1 °C precision) affixed to the peltier surface, ensuring that heating/cooling power levels were held constant across all trials. Heating rate was 5.5 °C/s and cooling was 5.0 °C/s (measured at peltier via 0.1 °C precision thermal camera, correlated via thermistor).

Tactile stimulation: Unlike our wearable version, we added two additional optocoupler and a bench-top power supply to drive similar vibration motors as used in prior work [40], i.e., coin-type ERM motors (10 mm diameter, 3 mm depth). Following the same parameters from prior work [40], our ERM was driven at 2.68 V (hot) and 3.19 V (cold), mounted directly on top of the gel electrodes to ensure co-located stimulation across modalities. The electrotactile stimulation was akin to that of our wearable device but used a desktop stimulator, i.e., the more precise and medically-compliant *Rehamove 3* (from *Hasomed*). Stimulations used a biphasic AC square waveform at 100 Hz with a 10 μs pulse-width. As is typical in electrotactile, frequency was selected in pilot experiments, while pulse-width was set low to allow per-user calibration by means of intensity adjustments (in mA)—this intensity adjustment with short pulse-width was used to ensure we can always induce weak electrotactile stimulations. Stimulations were delivered via pre-gelled electrodes (40 × 20 mm). Electrodes were attached to participants left forearm (ventral side) and secured with medical-grade tape. Moreover, the distance between tactile and thermal actuators varied based on the study: 8 cm in the first psychophysics study (similar to that of prior work [40]) and 12 cm for our second study in VR (to best match the visuals in the virtual experience).

5 Study 1: Electrotactile in Thermal Referral

Our first study builds on a psychophysics experiment from prior work [40] but introduces novel questions never previously investigated: (1) *can electrotactile stimulation induce thermal referral?*; and (2) *can lower intensity tactile stimulations (e.g., just above the feelable threshold) improve the quality of thermal referral?*

Hypotheses. Our hypotheses were that: (H1) electrotactile stimulation improves thermal referral; and (H2) lower intensity tactile stimulations can lead to purer thermal sensations, with less associated tactile "buzzing" sensations.

5.1 Conditions

While our work follows a standard psychophysics experiment (modelled after [40]), it is the first to feature a systematic range of conditions for thermal referral, i.e., rather than one, we have *five* distinct tactile conditions to isolate any possible contributions of intensity and modality:

Vibrotactile (abbreviated as *vibro*): A standard suprathreshold (i.e., clearly feelable) vibration intensity based on prior literature, i.e., we drove the ERM actuators at 2.68 V for hot trials and 3.19 V for cold trials [40].

Vibrotactile-minimum (*vibro-min*). A novel condition that we explore for the first time in this work. Unlike the vibrotactile baseline condition from prior work [40], this *vibro-min* condition is the absolute detection threshold for vibration. This was defined as the minimum voltage required to generate the first perceptible sensation, constrained by the mechanical starting voltage of motor (0.9 V). This value was determined per participant using a standard 1-up 1-down psychophysics staircase procedure with five reversals [4], and the threshold was calculated as the mean of the last three reversal points. The average threshold voltage across participants in *Study 1* was 0.96 V (SD=0.10).

Electrotactile: Our novel electrotactile stimulation for thermal referral was delivered at 100 Hz at 10 μs. To ensure this condition was on equal footing with the *vibro* baseline, we perceptually matched its intensity with the *vibro* condition via a two-alternative forced choice intensity matching task: participants received the standard vibro stimulus followed by an electrotactile stimulus and judged which felt stronger. We used the 1-up and 1-down staircase

method to adjust the electrotactile intensity until the participant perceived it at the same intensity as the vibrotactile. The staircase terminated after five reversals, and the point of subjective equality was the mean of the last three reversals. After calibration, we found an average of 46.4 mA (SD=12.5) for the intensity-matched electrotactile. Despite the findings that electrotactile alone can produce weak cold sensations [25, 26], none of our participants reported feeling cold sensations during the extensive electrotactile calibrations.

Electrotactile-minimum (*electrotactile-min*): Another novel condition, that applied our idea of tactile stimulation just above the detection threshold but for electrotactile stimulation. This was adjusted using the same psychophysics standard paradigm as the *vibro-min* condition and resulted in an average amplitude of 32.4 mA (SD=9.8).

No-tactile: We added a final control condition where participants feel only thermal stimulation. This was included to rule out the possibility that passive tactile cues from the apparatus could be sufficient to trigger thermal referral.

5.2 Trial design

Trials were largely modelled after [40], to ensure a direct comparison with prior work and attempt a replication of their findings. Thus, following prior work whenever possible, per-trial, participants closed their eyes while thermal and tactile stimuli were delivered simultaneously for 5 and 7 seconds, respectively (from prior work [40]). The tactile stimulus was intentionally extended by 2 seconds to prevent perceptual confusion from the peltier's slow thermal recession. After the stimulation ended, participants answered five questions.

The first three questions determined the referral state following the classification established in [40]: (Q1) did you feel a thermal sensation (hot or cold)?; (Q2) identify the region of strongest thermal sensation (choose between location of thermal or tactile actuator); and, (Q3) was the thermal sensation also felt at the other location? As in prior work, after a positive response to the first question, the answers in the two latter questions classify each trial into one of four states: *No Referral* (Q2: thermal location, Q3: no), *Weak Referral* (Q2: thermal location, Q3: yes), *Strong Referral* (Q2: tactile location, Q3: yes), or *Masking* (Q2: tactile location, Q3: no).

Additionally, to capture spatial and perceptual dimensions beyond binary referral classification, we added two questions: (Q4) draw the perceived thermal region; and (Q5) rate the perceived thermal vs. tactile intensity of the trial (using continuous sliders to implement a visual analog scale).

5.3 Study procedure

Our study procedure followed a within-subjects factorial design. This resulted in 660 trials at 30 trials per participant: 2 temperatures (hot & cold) × 5 conditions × 3 repetitions. To prevent any confounding factors, these 30 trials were then randomly shuffled, and participants were not made aware of which condition they were exposed to in any single trial. Finally, to ensure participants understood the instructions, they completed 5 practice trials. Also, advancing to the next trial was only allowed after our thermistor detected that participant's skin temperature returned to baseline.

5.4 Participants

We recruited 22 participants (12 male, 10 female, average age = 26.8 years old, SD=2.9, all right-hand dominant). Participants received $20 as compensation.

5.5 Results

5.5.1 Referral rates (i.e., how often thermal referral is effective) . Since referral rate takes discrete values, we adopted non-parametric analysis using Friedman tests with Conover's post-hoc t-tests and Holm-Bonferroni corrections. This statistical analysis revealed a significant main effect of tactile condition on referral rates for both cold referral ($\chi^2(4)$=26.88, p<0.001) as depicted in Figure 4 (a), and hot referral ($\chi^2(4)$=22.23, p<0.001) as depicted in Figure 4 (b).

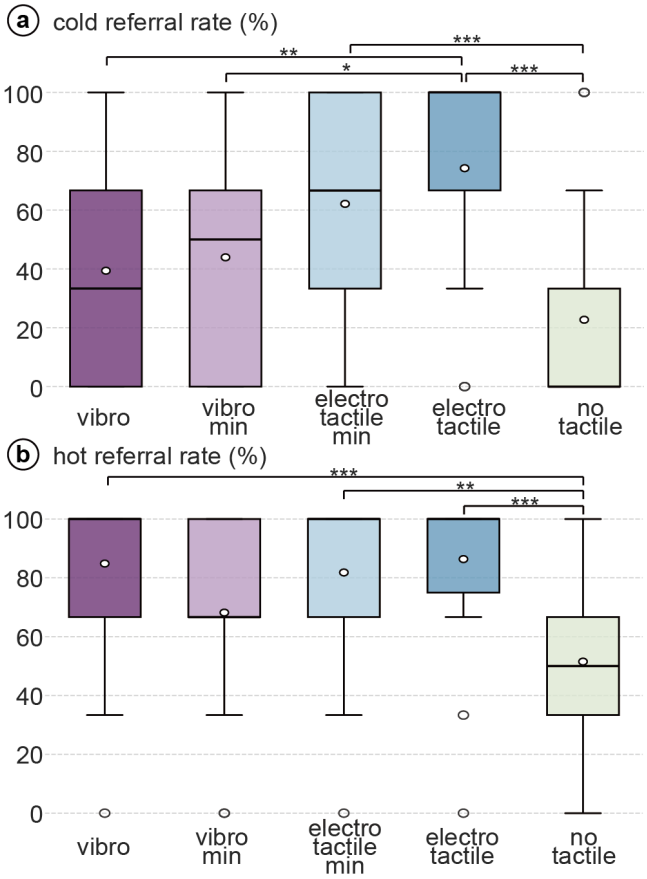

Figure 4: Mean referral rates on five tactile conditions and two temperature conditions: cold (a) and hot (b). Asterisks depict *p<0.05, **p<0.01, ***p<0.001. Box plots show median, IQR (box), 1.5× IQR (whiskers), outliers, and mean.

For cold stimuli, post-hoc comparisons suggest that transitioning from vibrotactile to electrotactile significantly increased (p=0.005) referral rates from an average of 39% (SD=37) with *vibro* condition to 74% (SD=34) on the *electrotactile* condition. This result confirms our main hypothesis (H1) for cold sensations, i.e., electrotactile improves cold thermal referral when compared to

vibrotactile. In fact, even against our novel *vibro-min* condition (i.e., just above perceptual threshold) there was still a statistically significant improvement (p=0.018) from switching from *vibro-min* (M=44%; SD=39) to *electrotactile*, further emphasizing the improved cold referral rates induced by electrical stimulation. Critically, for cold events, all forms of vibration (even our novel *vibro-min*) failed to significantly outperform our *no-tactile* control (*vibro* vs. *no-tactile*: p=0.212; *vibro-min* vs. *no-tactile*: p=0.110), suggesting that adding vibration provided negligible benefits over passive contact alone for cold referrals. Conversely, we did observe a significant improvement (p<0.001) between *electrotactile-min* (M=62%; SD=35) and *no-tactile* (M=23%; SD=38).

Conversely, for hot stimuli, the referral rates shown in Figure 4 (b) remained stable at approximately 80% regardless of the tactile modality or intensity, with *vibro-min* showing a marginal decrease. In fact, statistical analysis found significant differences between all experimental conditions (except *vibro-min*) against *no-tactile* (M=52%; SD=35), as follows: vibration (M=85%; SD=27; p<0.001), *electrotactile-min* (M=82%; SD=29; p=0.002), *electrotactile* (M=86%; SD=27; p<0.001). However, in hot referrals, no differences between the conditions themselves were found. Interestingly, this result rejects the hypothesis (H1) in the case hot referrals—unlike was the case in the cold referrals.

5.5.2 Results per referral-type (weak vs. strong vs, masking). In Figure 5, we break down results via the referral types following the classification in [40]: *no-referral* (failed to elicit thermals in the tactile location), *weak referral* (referred thermal, but weaker than at thermal location), *strong referral* (referred thermal, and stronger than at thermal location), and *masking* (all thermal at tactile location). This analysis follows our previous statistical analysis (i.e., non-parametric analysis using Friedman tests with Conover's post-hoc t-tests and Holm-Bonferroni corrections).

For cold stimuli, we observed a statistically significant increase in masking rates (χ^2(4)=11.32, p=0.023). With one significant difference (p=0.011) between *electrotactile* (M=36%; SD=40) and *no-tactile* (M=12%; SD=32). No other paired-comparisons exhibited statistical differences. This further suggests, for the case of cold, electrotactile results not only in a higher referral rate (our previous analysis) but also in more masking (this analysis), adding more credence to supporting H1, for cold referrals.

Conversely, for hot stimuli, and as in the previous analysis of referral rates, no differences were found in referral types.

5.5.3 Corroborating results with spatial data of thermal referrals. Insofar, our analysis was conducted following the procedure of prior work (i.e., using the three questions that allow to detect a thermal referral and classify its type). Next, we provide a spatial analysis of *where* participants felt the sensations, to further corroborate our findings thus far. Figure 6 depicts the spatial distribution of perceived thermal sensations. We analyzed the results with a one-way Repeated-Measures ANOVA with Greenhouse-Geisser corrections for sphericity violations, followed by post-hoc t-tests with Holm-Bonferroni corrections.

For cold stimuli, Figure 6 (a) depicts a progressive shift in participants' response density towards the tactile actuator as the condition changes from *no-tactile* to *electrotactile*. To quantify this effect, we analyzed the horizontal centroid distance relative to the

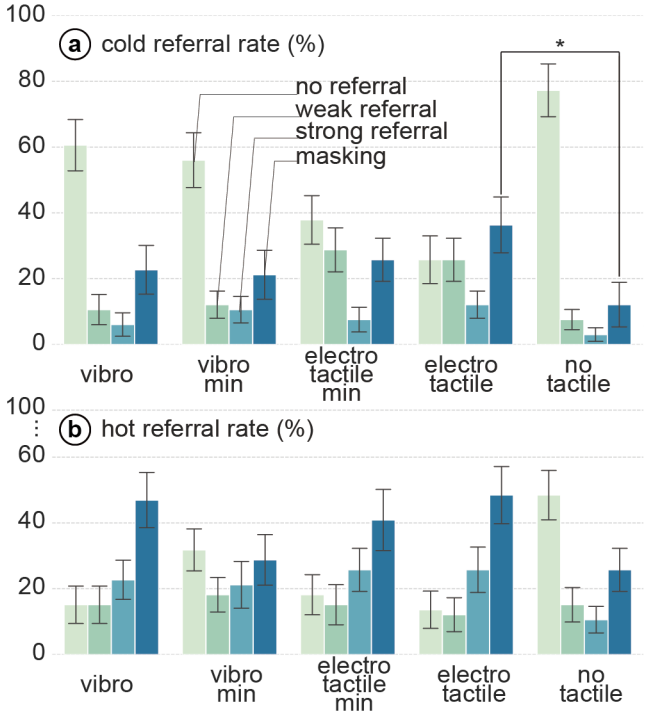

Figure 5: Mean referral rates of no referral, weak referral, strong referral and masking on five different tactile conditions and two temperatures. Error bars depict standard errors. * depicts statistical significance at p<0.05.

peltier (0 cm). Our ANOVA result revealed a significant main effect of tactile condition on centroid location (F(3.00, 63.03)=5.60, p=0.002, η^2_p=0.21). Post-hoc analysis confirmed a significant improvement (p=0.003) of *electrotactile* (M= 4.32 cm; SD= 3.59) over *no-tactile* (M=1.55 cm; SD=3.21). It also confirmed a significant improvement (p=0.032) of *electrotactile-min* (M=3.51 cm; SD=2.99) over *no-tactile*. Conversely, no significant differences were found between all other conditions—including *vibro* and/or *vibro-min* vs. *no-tactile*—further reinforcing that vibration was not effective at spatially shifting cold sensations. This further corroborates our H1 for cold referrals.

For hot stimuli, Figure 6 (b) depicts a lesser shift in participants' response density towards the tactile actuator as the condition changes from *no-tactile* to *electrotactile*. To quantify this effect, we again analyzed the horizontal centroid distance to the thermal actuator. The ANOVA result suggested a significant main effect (F(3.00, 62.97)=8.05, p<0.001, η^2_p=0.28). Post-hoc analysis confirmed a significant improvement (p=0.015) of *vibro* (M=6.09 cm; SD=2.91) over *no-tactile* (M=3.28 cm; SD=3.01). Moreover, it confirmed a significant improvement (p=0.005) of *electrotactile-min* (M=5.71 cm; SD=2.91) over *no-tactile*. Also, it confirmed a third significant improvement (p=0.005) of *electrotactile* (M=6.34 cm; SD=3.05) over *no-tactile*.

5.5.4 Intensity of thermal sensations . Next, we analyze perceived thermal intensities, for both cold and hot stimuli with the same ANOVA procedure (succinctly a repeated measures with corrections

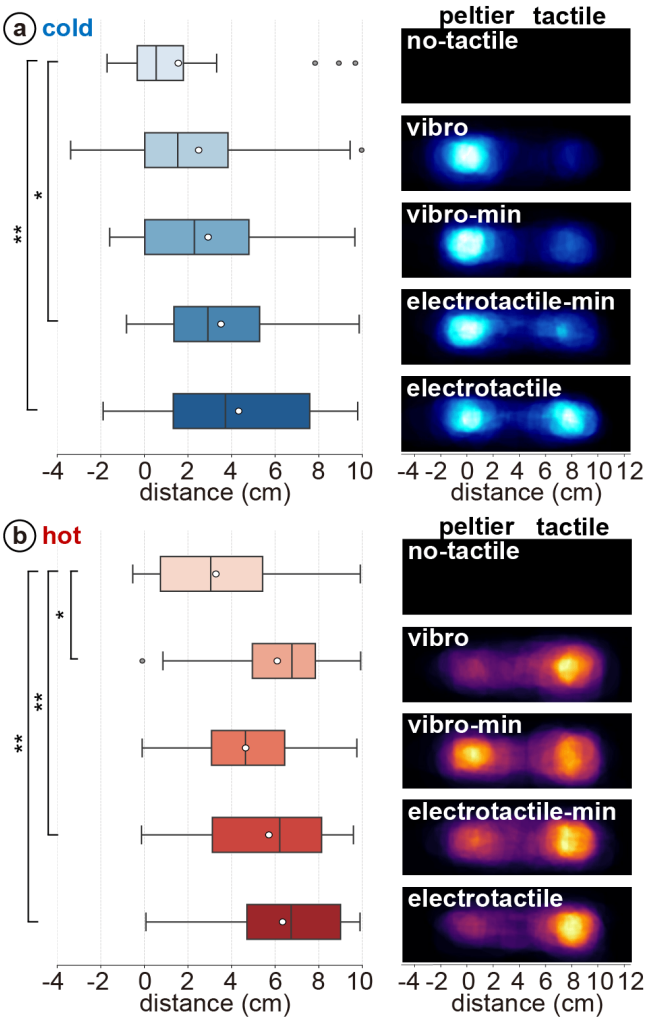

Figure 6: Distribution of perceived thermals by overlaying participant drawings. Red and blue hues represent hot and cold, and brightness encodes response frequency. Box plot shows the horizontal centroid distance relative to the peltier (0 cm). Asterisks depict *p<0.05, and **p<0.01. Box plots show median, IQR (box), 1.5× IQR (whiskers), outliers, and mean.

for sphericity violations, and Holm-Bonferroni corrected post-hoc t-tests).

For cold stimuli, Figure 7 (a) depicts perceived cold intensity for all five conditions. The ANOVA result suggested a significant main effect of tactile condition (F(3.40, 71.32)=4.50, p=0.004, η^2_p=0.177). Post-hoc comparisons suggested a significant improvement (p=0.023) of *electrotactile-min* (M=0.60, SD=0.16) over *vibro* (M=0.51, SD=0.16). Importantly, it also confirmed a significant improvement (p=0.018) of *electrotactile* (M=0.59, SD=0.18) over *vibro*. Moreover, it also confirmed a third significant improvement (p=0.035) of *electrotactile-min* over *no-tactile* (M=0.51, SD=0.20).

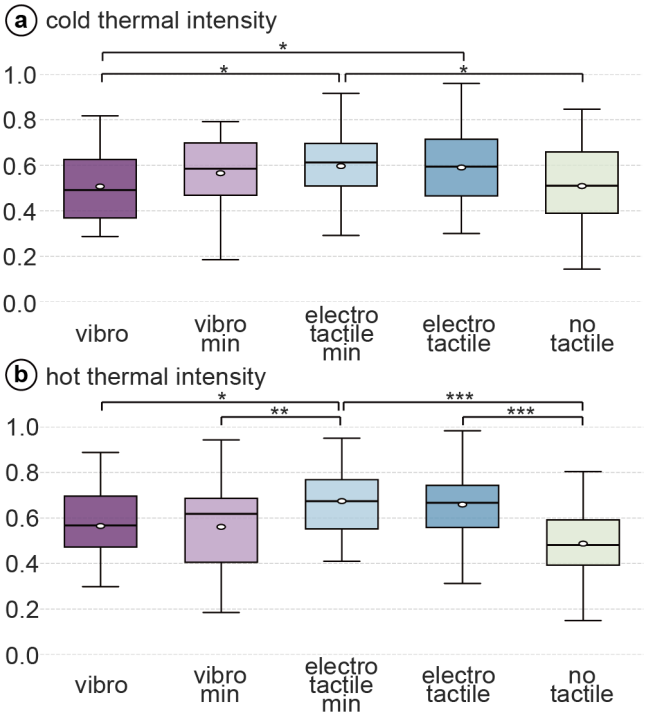

Figure 7: Perceived thermal intensity for (a) cold and (b) hot for different tactile conditions. Asterisks depict *p<0.05, **p<0.01, and ***p<0.001. Box plots show median, IQR (box), 1.5× IQR (whiskers), outliers, and mean.

For hot stimuli, Figure 7 (b), ANOVA revealed a significant main effect (F(2.95, 61.85) = 11.12, p < 0.001, η^2_p = 0.346). Post-hoc comparisons suggested a significant improvement (p=0.015) of *electrotactile-min* (M=0.67, SD=0.15) over *vibro* (M=0.56, SD=0.16). Moreover, it confirmed a significant improvement (p=0.005) of *electrotactile-min* over *vibro-min* (M=0.56, SD=0.20). It also confirmed a third significant improvement (p<0.001) of *electrotactile-min* over *no-tactile* (M=0.49, SD=0.16). Finally, it confirmed a fourth significant improvement (p<0.001) of *electrotactile* (M=0.66, SD=0.15) over *no-tactile.*

It is worth reminding that the peltier output power was held constant across all conditions within each temperature. Despite this, the choice of tactile modality significantly influenced perceived thermal intensity. These results highlight a new advantage of electrotactile (*electrotactile-min* for hot/cold and *electrotactile* for hot) as it increases the perceived thermal intensity, compared to the no-tactile (a statistical difference not observed in vibrotactile conditions).

5.5.5 Purity of thermal sensations . Next, we turn our analysis into the metric that directly addresses our second hypothesis: *do our new approaches* (firstly, *electrotactile*, but also the usage of *weaker* tactile stimulus) *minimize the unwanted tactile percepts and maximize thermal percepts?* In other words, *do they improve the purity of thermal sensations?*

To formally evaluate the dominance of the thermal sensation over the tactile, we define a *thermal purity* metric—simply the

thermal intensity rating divided by the sum of the thermal and tactile intensity ratings as follows:

$$\textbf{Thermal purity} = \frac{\textbf{Thermal intensity}}{\textbf{Thermal intensity} + \textbf{Tactile intensity}}$$

To calculate this, we require thermal intensity (i.e., previous analysis), and tactile intensity, which we analyze next.

Tactile intensity. We used a one-way Repeated-Measures ANOVA with Greenhouse-Geisser corrections for sphericity violations, followed by post-hoc t-tests with Holm-Bonferroni corrections, which suggested a significant main effect ($F(2.86, 60.01)=66.52$, $p<0.001$, $\eta^2_p=0.76$). Figure 8 depicts these results across all conditions. As expected, both *vibro* vs. *electrotactile* as well as *vibro-min* vs. *electrotactile-min* were not found to be significantly different with respect to their tactile intensity, which validates the quality of our perceptual matching of the intensity calibration. Conversely, all remaining pairwise comparisons were statistically significant. First, as expected, *vibro* (M=0.67; SD= 0.17) was found ($p<0.001$) to be stronger than stronger than *vibro-min* (M=0.22; SD=0.17), and *electrotactile* (M= 0.61; SD=0.21) was stronger ($p<0.001$) than *electrotactile-min* (M=0.30; SD=0.26). Again, this confirms that our apparatuses worked as expected (i.e., the *min* conditions were indeed correctly calibrated). Moreover, we found *vibro* to be stronger ($p<0.001$) than *electrotactile-min*. Also, we found *electrotactile* to be stronger ($p<0.001$) than *vibro-min*. Finally, when compared to *no-tactile* (M=0.04; SD=0.11), all conditions were stronger ($p<0.001$).

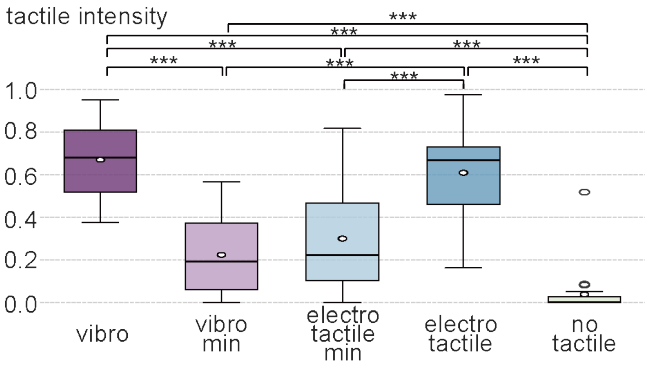

Figure 8: Tactile intensity for different tactile conditions. * depicts statistical significance at p<0.001. Box plots show median, IQR (box), 1.5× IQR (whiskers), outliers, and mean.**

Thermal purity. As this data satisfied normality, we used a one-way Repeated-Measures ANOVA with Greenhouse-Geisser corrections for sphericity violations, followed by post-*hoc* t-tests with Holm-Bonferroni corrections, which revealed of a main effect of condition ($F(2.20, 46.11) = 36.36$, $p<0.001$, $\eta^2_p=0.634$). Figure 9 depicts the calculated thermal purity across all conditions (except the *no-tactile*, which was not included in this analysis, since it is a control, not a referral condition). As expected, given the low tactile ratings of *vibro-min* and *electrotactile-min*, we found no significant difference in their thermal purity.

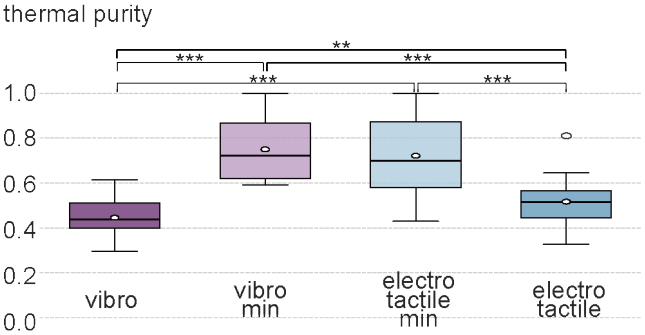

Figure 9: Thermal purity across all experimental conditions (except no-tactile, which does not include any tactile intensity, thus saturates thermal purity). Asterisks depict **p<0.01, ***p<0.001. Box plots show median, IQR (box), 1.5× IQR (whiskers), outliers, and mean.

Four pair-wise comparisons are directly responsible in answering our secondary hypothesis (H2—weaker tactile conditions improve thermal purity). First, we found that *vibro-min* (M=0.75; SD=0.14) displayed a significant higher thermal purity ($p<0.001$) when compared to both *vibro* (M=0.45; SD=0.08) and *electrotactile* (M=0.52; SD=0.11). Second, we found that *electrotactile-min* (M=0.72; SD=0.18) displayed a significant higher thermal purity ($p<0.001$) when compared to both *vibro* and *electrotactile*. Taken together, these statistical results confirm our second hypothesis, as both conditions with minimum tactile intensity (just above feelable threshold) maximized perceive thermals and minimized perceived tactile (i.e., more thermally "pure"). Finally, we also found that *electrotactile* was perceived at a higher thermal purity ($p=0.003$) than *vibro*.

6 Discussion: Synthesizing insights from data

Summary of findings. We validated two novel proposals: (1) electrotactile stimulation can outperform vibrotactile for cold referrals; and (2) weaker tactile stimulation (both for electrotactile and vibrotactile) can improve the purity of thermal sensations, mitigating some of the unwanted tactile sensation. Moreover, we also provided a replication of the insights of prior work on thermal referral [40], further emphasizing the promise that this technique holds.

Discussion of possible mechanism. Our main result, which is the improvement of cold referral rates, is impactful as this is a well-documented challenge, i.e., the asymmetric rates of cold being approximately 20% lower than hot [40]. While the prevailing hypothesis attributes this to thermoreceptor distribution [10, 21], our findings suggest this is incomplete: if the asymmetry were driven solely by thermoreceptor distribution, changing the tactile modality should have little to no effect. Yet switching to electrotactile boosted cold referral from 39% to 74%, while hot referral remained stable at around 85%. Likely, there is another underlying mechanism for cold sensations that remains elusive, which is activated by electrotactile. We discuss the following possible explanations: (1) tactile attention: electrotactile activates a broader range of mechanoreceptors than

vibration [14]; (2) beyond mechanoreceptors: electrotactile stimulation may activate myelinated A-δ afferents that contribute to cold sensation [24–26]. (3) Hybrid explanations: multiple mechanisms can contribute partially; and (4) undiscovered mechanisms.

No-tactile caution. We also found new and unexpected insights since our experiment was one of the few to feature a *no-tactile* condition ([3] also uses no-tactile, but it uses no active actuator—only passive haptics via a piece of glass). In it, we noted that during thermal referrals, illusory referrals (no-tactile condition) can be surprisingly common (at 23% for cold referral rate and 52% for hot). This finding was not previously reported in HCI literature but is important for anyone utilizing this illusion. There are two possible factors: the mechanical pressure exerted by the electrodes or vibration motors may provide sufficient somatic input to trigger a weak illusion or—albeit less likely—expectation effects inherent from the randomized experimental design.

Guidelines. Next, a surprising part of our findings is that our results do not suggest merely swapping electrotactile for vibrotactile, but rather that these modalities can be used depending on target sensations. Figure 10 synthesizes these results into guidelines by depicting how modality can be chosen based on two perceptual dimensions: intended tactile sensation (weak vs. strong) and intended thermal sensation (hot vs. cold). As such, one hypothesizes that distinct thermal experiences might benefit from different tactile actuators. For non-contact heat events, *electrotactile-min* emerges as a possible choice as it maximizes thermal purity (minimizing tactile sensations) and sustains a high referral rate. For contact heat events, both standard *electrotactile* and *vibro* are highly effective, yielding robust referral rates and providing the tactile feedback necessary to simulate physical contact with a hot object. For non-contact cold events, *electrotactile-min* might be the most suited modality as it provides a higher referral rate to trigger the challenging cold referral illusion while maintaining the high thermal purity expected of a non-contact event. Finally, for contact cold events, *electrotactile* emerges as a possible choice as it achieves the highest overall cold referral rate and spatial displacement, while simultaneously delivering the required tactile feedback to simulate touching a cold surface. If validated, which is the aim of our second study, such guidelines could enable future researchers & designers to optimize thermal referrals.

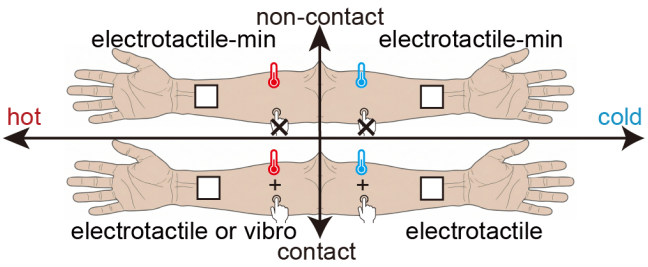

Figure 10: Conceptual guide to modality selection (*vibrotactile, electrotactile,* or *min* conditions for weak stimulation).

7 Study 2: Rate the sensation reality in VR

Despite the electrotactile benefits and modality-selection guidelines we found in Study 1, it could not prove this leads to measurable benefits outside of a controlled psychophysics experiment, so we designed Study 2 to evaluate whether these advantages translate to improved realism in VR.

Hypothesis. Our main hypothesis (H3) was that our modality selection guidelines (from Study 1) would yield significantly higher perceived realism across VR thermal scenarios, than the vibrotactile approach (baseline).

7.1 Participants

We recruited 20 participants (11 male, 9 female, average age=25.9 years old, SD=3.7, two left-handed). Participants gave informed consent and received $20 as compensation.

7.2 Thermal tasks & conditions.

We designed four interactive tasks in VR (Figure 11) that directly map to the four distinct thermal-tactile experiences using the two dimensions shown in Figure 10: (X) temperature and (Y) contact. In these VR experiences, all animation timings were kept consistent; only visuals for hot and cold were changed.

Non-contact heat: participants observed two virtual candles while resting their avatar's arm on a virtual table: one near their wrist (real heat) and one near their elbow (referred heat). The candles were activated one at a time in a timed sequence. Participants experienced this task under two conditions: *vibro* (baseline) and *electrotactile-min*.

Contact heat: participants observed two candles and judged their realism: one near their wrist (real heat) and one sitting on top of their arm, near their elbow (referred heat), simulating physical contact with their skin. Participants experienced this under *vibro* vs. *electrotactile*.

Non-contact cold: participants observed two virtual ice cubes and judged their realism: one near their wrist (real cold) and one near their elbow (referred cold). Participants experienced this under *vibro* vs. *electrotactile-min*.

Contact cold: participants observed the same ice cubes and judged their realism: one near their wrist (real cold) and one near their elbow and sitting on top of their arm (referred cold), simulating physical contact with their skin. Participants experienced this under *vibro* vs. *electrotactile*.

7.3 Study procedure

We performed our previous calibration to equalize the perceived intensity of vibration and electrotactile conditions, resulting in an average *electrotactile-min* intensity of 30.1 mA (SD=8.2) and *electrotactile* of 49.3 mA (SD=11.8). Next, we established perceptual anchors for the realism scale, by letting participants feel examples of real thermal+tactile sensations using a peltier attached to either a prop candle (safe to touch, no flame burn) and a prop ice cube (safe to touch, no cold burn). We employed these anchors since it has been established that VR visuals can bias the perceived thermal location [9].

Participants completed the four tasks in randomized order. Each comprised three repetitions per condition (*vibrotactile* vs. *electrotactile* or *electrotactile-min*). Per trial, participants rated the realism of the thermal experience associated with the second virtual object on a 7-point Likert scale (1 = not realistic, 7 = perfectly realistic). To mitigate sequence effects, we shuffled all six trials inside each task and participants were not told which condition a trial belonged to. This resulted in 480 trials = 4 tasks × 2 conditions × 3 repetitions × 20 participants. At the end, participants were offered a chance to provide verbal feedback.

7.4 Results

To statistically analyze the ordinal Likert data for perceived realism, we employed Wilcoxon Signed-Rank tests with Holm-Bonferroni corrections for multiple comparisons. Figure 11 depicts realism ratings in all four tasks.

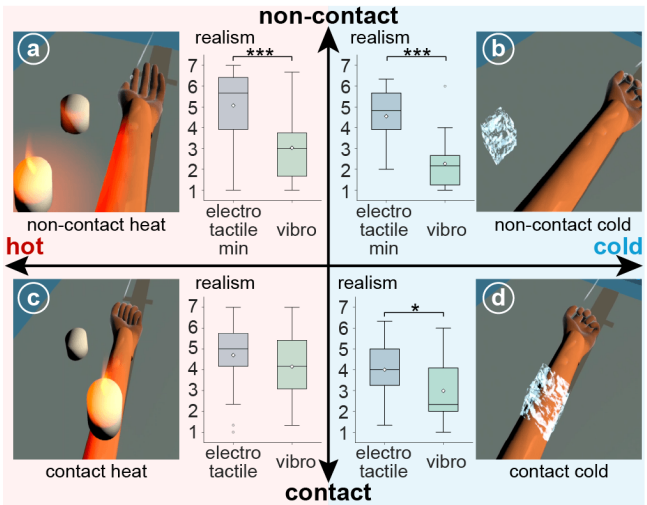

Figure 11: Realism in four thermal VR tasks. Asterisks depict *p<0.05, and ***p<0.001. Box plots show median, IQR (box), 1.5× IQR (whiskers), outliers, and mean.

For non-contact heat events, depicted in Figure 11 (a), participants rated *electrotactile-min* (M=5.1; SD=1.8) to be more realistic (p<0.001) than *vibro* (M=3.0; SD=1.5).

For non-contact cold events, depicted in Figure 11 (b), participants rated *electrotactile-min* (M=4.6, SD=1.3) to be more realistic (p<0.001) than *vibro* (M=2.3, SD=1.2).

For contact hot events, depicted in Figure 11 (c)—as expected—we did not see a significant different between participants ratings on *electrotactile* (M=4.7; SD=1.7) and *vibro* (M=4.2; SD=1.8)—consistent with Study 1's findings.

For contact cold events, depicted in Figure 11 (d), participants rated *electrotactile* (M=4.0, SD=1.3) to be more realistic (p=0.031) than *vibro* (M=3.0, SD=1.6).

Post-study commentaries corroborated these results. Nine out of 20 participants explicitly identified the "vibrotactile buzz" as a source of perceptual conflict, noting that the vibration caused their arm to shake in a manner inconsistent with the expected interaction. Two participants noted that the spatial correspondence between the virtual object and the perceived thermal sensation was more accurate under electrotactile, suggesting that electrotactile's increased realism stems not only from reduced tactile distraction but also from improved visuo-haptic spatial congruence.

In summary, we confirmed our hypothesis (H3) that electrotactile significantly improves realism over *vibro* in three of four VR scenarios, suggesting promise in our modality selection guidelines.

8 Demonstrating our insights in a VR example

To demonstrate the practical applicability of our modality selection guidelines, we developed an "iced tea making" VR experience (Figure 12) that switches between configurations to best render both contact and non-contact thermal events.

First, in Figure 12 (a), as the user reaches past a boiling pot to fetch a cup, steam diffuses onto their arm—a non-contact heat event is rendered via *electrotactile-min* to deliver warmth without much tactile contact. Then, in Figure 12 (b), while placing a tea bag, the arm hovers over ice cubes and *electrotactile-min* drives cold referral to recreate the ambient chill without much physical touch. Suddenly, in Figure 12 (c) hot water splashes onto the arm—a contact heat event rendered via *electrotactile*, providing strong thermal and tactile feedback. Finally, in Figure 12 (d), the user washes their scalded arm under a cold faucet as *electrotactile* delivers cold and tactile sensations for this contact cold event.

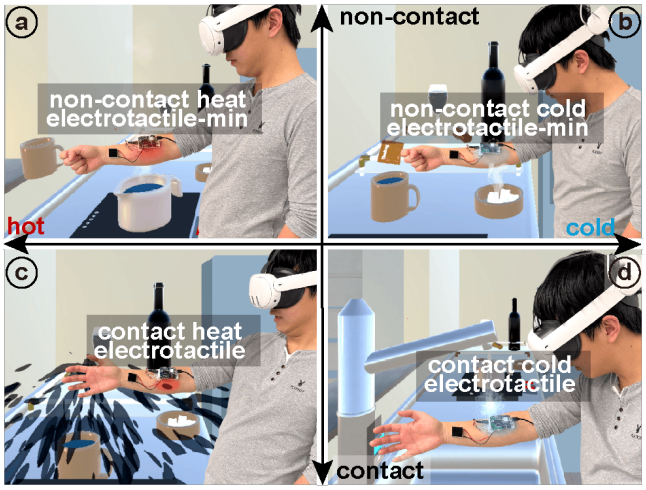

Figure 12: Using electrotactile-based thermal referral to feel both tactile and thermal sensations in VR environment.

9 Limitations

Finally, as the first exploration of this novel method to achieve thermal referral, our investigation is not without limitations, which reveal future research directions: (1) with electrotactile stimulation, thermal referral of heat sensations remains similar to that of vibrotactile; (2) neither our approach nor vibrotactile-based referral achieve a 100% referral rate—calling for more research in this area, both in HCI but also in neuroscience; (3) similarly, as with vibration-based referrals, the referral type (e.g., weak, strong, or

masking) is also variable; (4) like the vast majority of prior work in this area, we only focused on the arm; (5) we employed a fixed distance between tactile and thermal actuators and did not investigate the distance effect on referral; and finally, (6) as in prior work [40], our study also focused on static thermals; extending to moving thermal sensations remains an open direction, though we see no fundamental barrier in principle.

10 Conclusions and future work

In this paper, we proposed electrotactile as a method for realizing thermal referral. Our results demonstrate that electrotactile stimulation significantly improves cold referral rates, mitigates existing limitations with non-contact thermal events, and enhances perceived realism across diverse VR scenarios. Our empirical results were synthesized into guidelines, which we validated in our second study, that might enable future researchers & designers to optimize thermal referrals in interactive domains, such as AR/VR.

Future work might opt to explore additional body sites and variable actuator distances for generalizability, investigating long-term comfort during extended use, and studying how electrotactile parameters (e.g., frequency, pulse width) can be further optimized to improve referral quality. As researchers has shown that different thermal rates influence thermal sensations [6, 15], we will also study how different rates influence thermal referral. We believe that the shift from vibrotactile to electrotactile stimulation opens new design possibilities for richer and more expressive thermal experiences in virtual and augmented reality.

Acknowledgments

We thank Prof. Jasmine Lu for proofreading assistance; Yun Ho for assistance with the figures and video; Prof. Jas Brooks for discussions during the early stages of this investigation; and, especially, Romain Nith for insightful discussions and for composing the original song for the video figure.

This material is based upon work supported by the National Science Foundation under Grant No. 2047189 and 2212352. Any opinions, findings, conclusions, or recommendations expressed in this material are those of the authors and do not necessarily reflect the views of the National Science Foundation.

References

[1] Yosuef Alotaibi, John H Williamson, and Stephen Anthony Brewster. 2022. First Steps Towards Designing Electrotactons: Investigating Intensity and Pulse Frequency as Parameters for Electrotactile Cues. In *Proceedings of the 2022 CHI Conference on Human Factors in Computing Systems (CHI '22)*. Association for Computing Machinery, New York, NY, USA, 1–11. doi:10.1145/3491102.3501863

[2] Jas Brooks, Steven Nagels, and Pedro Lopes. 2020. Trigeminal-based Temperature Illusions. In *Proceedings of the 2020 CHI Conference on Human Factors in Computing Systems*. ACM, Honolulu HI USA, 1–12. doi:10.1145/3313831.3376806

[3] Antonio Cataldo, Elisa Raffaella Ferrè, Giuseppe di Pellegrino, and Patrick Haggard. 2016. Thermal referral: evidence for a thermoceptive uniformity illusion without touch. *Scientific Reports* 6, 1 (2016), 35286. doi:10.1038/srep35286

[4] Tom N. Cornsweet. 1962. The staircrase-method in psychophysics. *The American Journal of Psychology* 75, 3 (Sep 1 1962), 485–491. doi:10.2307/1419876

[5] Damir J. Djozic, Dubravka Bojanic, Goran Krajoski, Nikola Popov, and Vojin Ilic. 2015. Psychophysical characteristics of electrotactile stimulation: The impact of changes in stimulation pulse width and frequency on human perception. In *Proceedings of the 2015 IEEE 15th International Conference on Bioinformatics and Bioengineering (BIBE) (BIBE '15)*. IEEE Computer Society, USA, 1–5. doi:10.1109/BIBE.2015.7367711

[6] Davide Filingeri. 2016. Neurophysiology of Skin Thermal Sensations. *Comprehensive Physiology* 6, 3 (2016), 1429–1491. doi:10.1002/j.2040-4603.2016.tb00715.x

[7] Marta Franceschi, Lucia Seminara, Strahinja Dosen, Matija Strbac, Maurizio Valle, and Dario Farina. 2017. A System for Electrotactile Feedback Using Electronic Skin and Flexible Matrix Electrodes: Experimental Evaluation. *IEEE Transactions on Haptics* 10, 2 (4 2017), 162–172. doi:10.1109/TOH.2016.2618377

[8] Barry G. Green. 1977. Localization of thermal sensation: An illusion and synthetic heat. *Perception & Psychophysics* 22, 4 (Jul 1 1977), 331–337. doi:10.3758/BF03199698

[9] Sebastian Günther, Alexandra Skogseide, Robin Buhlmann, and Max Mühlhäuser. 2024. Assessing the Influence of Visual Cues in Virtual Reality on the Spatial Perception of Physical Thermal Stimuli. In *Proceedings of the 2024 CHI Conference on Human Factors in Computing Systems (CHI '24)*. Association for Computing Machinery, New York, NY, USA, 1–12. doi:10.1145/3613904.3642154

[10] Hsin-Ni Ho, Junji Watanabe, Hideyuki Ando, and Makio Kashino. 2011. Mechanisms Underlying Referral of Thermal Sensations to Sites of Tactile Stimulation. *The Journal of Neuroscience* 31, 1 (Jan 5 2011), 208–213. doi:10.1523/JNEUROSCI.2640-10.2011

[11] Ya Huang, Jingkun Zhou, Pingchuan Ke, Xu Guo, Chun Ki Yiu, Kuanming Yao, Shaoyu Cai, Dengfeng Li, Yu Zhou, Jian Li, Tsz Hung Wong, Yiming Liu, Lei Li, Yuyu Gao, Xingcan Huang, Hu Li, Jiyu Li, Binbin Zhang, Zhenlin Chen, Huanxi Zheng, Xingyu Yang, Haichen Gao, Zichen Zhao, Xu Guo, Enming Song, Hui Wu, Zuankai Wang, Zhaoqian Xie, Kening Zhu, and Xinge Yu. 2023. A skin-integrated multimodal haptic interface for immersive tactile feedback. *Nature Electronics* 6 (2023), 1020–1031. doi:10.1038/s41928-023-01074-z

[12] K. A. Kaczmarek, J. G. Webster, P. Bach-y Rita, and W. J. Tompkins. 1991. Electrotactile and vibrotactile displays for sensory substitution systems. *IEEE transactions on bio-medical engineering* 38, 1 (1 1991), 1–16. doi:10.1109/10.68204

[13] Hiroyuki Kajimoto. 2012. Electrotactile Display with Real-Time Impedance Feedback Using Pulse Width Modulation. *IEEE Transactions on Haptics* 5, 2 (4 2012), 184–188. doi:10.1109/TOH.2011.39

[14] Hiroyuki Kajimoto, Naoki Kawakami, and Susumu Tachi. 2004. Electro-Tactile Display with Tactile Primary Color Approach. In *Proceedings of the 2004 IEEE/RSJ International Conference on Intelligent Robots and Systems*. IEEE, Sendai, Japan, 1–10. https://tachilab.org/content/files/publication/ic/kajimoto200410IROS.pdf

[15] Dan R. Kenshalo, Charles E. Holmes, and Paul B. Wood. 1968. Warm and cool thresholds as a function of rate of stimulus temperature change. *Perception & Psychophysics* 3, 2 (Mar 1 1968), 81–84. doi:10.3758/BF03212769

[16] Panagiotis Kourtesis, Ferran Argelaguet, Sebastian Vizcay, Maud Marchal, and Claudio Pacchierotti. 2022. Electrotactile Feedback Applications for Hand and Arm Interactions: A Systematic Review, Meta-Analysis, and Future Directions. *IEEE Transactions on Haptics* 15, 3 (Jul 1 2022), 479–496. doi:10.1109/TOH.2022.3189866

[17] Weikang Lin, Dongsheng Zhang, Wang Wei Lee, Xuelong Li, Ying Hong, Qiqi Pan, Ruirui Zhang, Guoxiang Peng, Hong Z. Tan, Zhengyou Zhang, Lei Wei, and Zhengbao Yang. 2022. Super-resolution wearable electrotactile rendering system. *Science Advances* 8, 36 (Sep 9 2022), eabp8738. doi:10.1126/sciadv.abp8738

[18] Robert W. Lindeman, Robert Page, Yasuyuki Yanagida, and John L. Sibert. 2004. Towards full-body haptic feedback: the design and deployment of a spatialized vibrotactile feedback system. In *Proceedings of the ACM symposium on Virtual reality software and technology (VRST '04)*. Association for Computing Machinery, New York, NY, USA, 146–149. doi:10.1145/1077534.1077562

[19] Robert W. Lindeman, Yasuyuki Yanagida, Haruo Noma, and Kenichi Hosaka. 2006. Wearable vibrotactile systems for virtual contact and information display. *Virtual Reality* 9, 2–3 (2006), 203–213. doi:10.1007/s10055-005-0010-6

[20] Yuhu Liu, Satoshi Nishikawa, Young Seong, Ryuma Niiyama, and Yasuo Kuniyoshi. 2021. ThermoCaress: A Wearable Haptic Device with Illusory Moving Thermal Stimulation. In *Proceedings of the 2021 CHI Conference on Human Factors in Computing Systems (CHI '21)*. Association for Computing Machinery, New York, NY, USA, 1–12. doi:10.1145/3411764.3445777

[21] Maohui Luo, Zhe Wang, Hui Zhang, Edward Arens, Davide Filingeri, Ling Jin, Ali Ghahramani, Wenhua Chen, Yingdong He, and Binghui Si. 2020. High-density thermal sensitivity maps of the human body. *Building and Environment* 167 (Jan 1 2020), 106435. doi:10.1016/j.buildenv.2019.106435

[22] Alex Mazursky, Jas Brooks, Beza Desta, and Pedro Lopes. 2024. ThermalGrasp: Enabling Thermal Feedback even while Grasping and Walking. In *2024 IEEE Conference Virtual Reality and 3D User Interfaces (VR)*. 342–353. doi:10.1109/VR58804.2024.00056

[23] Claudio Pacchierotti, Stephen Sinclair, Massimiliano Solazzi, Antonio Frisoli, Vincent Hayward, and Domenico Prattichizzo. 2017. Wearable Haptic Systems for the Fingertip and the Hand: Taxonomy, Review, and Perspectives. *IEEE Transactions on Haptics* 10, 4 (10 2017), 580–600. doi:10.1109/TOH.2017.2689006

[24] J. T. Rubinstein. 1991. Analytical theory for extracellular electrical stimulation of nerve with focal electrodes. II. Passive myelinated axon. *Biophysical Journal* 60, 3 (9 1991), 538–555. doi:10.1016/S0006-3495(91)82084-7

[25] Taiga Saito, Takumi Hamazaki, Seitaro Kaneko, and Hiroyuki Kajimoto. 2023. Coldness Presentation to Ventral Forearm using Electrical Stimulation with Elastic Gel and Anesthetic Cream. In *Proceedings of the Augmented Humans International Conference 2023* (Glasgow, United Kingdom) *(AHs '23)*. Association for Computing Machinery, New York, NY, USA, 46–54. doi:10.1145/3582700.

3582713

[26] Taiga Saito, Jianyao Zhang, Takayuki Kameoka, and Hiroyuki Kajimoto. 2021. Thermal Sensation on Forehead Using Electrical Stimulation: Thermal Sensation Using Electrical Stimulation. In *Extended Abstracts of the 2021 CHI Conference on Human Factors in Computing Systems (CHI EA '21)*. Association for Computing Machinery, New York, NY, USA, 1–5. doi:10.1145/3411763.3451724

[27] Yongsuk Seo and Jung-Hyun Kim. 2021. Differential Cutaneous Thermal Sensitivity in Humans: Method of Limit vs. Method of Sensation Magnitude. *International Journal of Environmental Research and Public Health* 18, 23 (Nov 29 2021), 12576. doi:10.3390/ijerph182312576

[28] Yuxiang Shi, Fan Wang, Jingwen Tian, Shuyao Li, Engang Fu, Jinhui Nie, Rui Lei, Yafei Ding, Xiangyu Chen, and Zhong Lin Wang. 2021. Self-powered electro-tactile system for virtual tactile experiences. *Science Advances* 7, 6 (Feb 3 2021), eabe2943. doi:10.1126/sciadv.abe2943

[29] Yatharth Singhal, Daniel Honrales, and Jin Ryong Kim. 2025. HeatFlow: A Thermal-Tactile Display for Dynamic 2D Thermal Movements. In *Proceedings of the 38th Annual ACM Symposium on User Interface Software and Technology (UIST '25)*. Association for Computing Machinery, New York, NY, USA, 1–18. doi:10.1145/3746059.3747619

[30] Yatharth Singhal, Daniel Honrales, Haokun Wang, and Jin Ryong Kim. 2024. Thermal In Motion: Designing Thermal Flow Illusions with Tactile and Thermal Interaction. In *Proceedings of the 37th Annual ACM Symposium on User Interface Software and Technology (UIST '24)*. Association for Computing Machinery, New York, NY, USA, 1–13. doi:10.1145/3654777.3676460

[31] Hyungki Son, Haokun Wang, Yatharth Singhal, and Jin Ryong Kim. 2023. Upper Body Thermal Referral and Tactile Masking for Localized Feedback. *IEEE Transactions on Visualization and Computer Graphics* 29, 5 (5 2023), 2211–2219. doi:10.1109/TVCG.2023.3247068

[32] Yudai Tanaka, Alan Shen, Andy Kong, and Pedro Lopes. 2023. Full-hand Electro-Tactile Feedback without Obstructing Palmar Side of Hand. In *Proceedings of the 2023 CHI Conference on Human Factors in Computing Systems*. ACM, Hamburg Germany, 1–15. doi:10.1145/3544548.3581382

[33] Shan-Yuan Teng, Aryan Gupta, and Pedro Lopes. 2024. Haptic Permeability: Adding Holes to Tactile Devices Improves Dexterity. In *Proceedings of the CHI Conference on Human Factors in Computing Systems*. ACM, Honolulu HI USA, 1–12. doi:10.1145/3613904.3642156

[34] Shan-Yuan Teng, Gene S-H Kim, Xuanyou Liu, and Pedro Lopes. 2025. Seeing with the Hands: A Sensory Substitution That Supports Manual Interactions. In *Proceedings of the 2025 CHI Conference on Human Factors in Computing Systems*. ACM, Yokohama Japan, 1–15. doi:10.1145/3706598.3713419

[35] Shan-Yuan Teng, Yudai Tanaka, Alex Mazursky, and Pedro Lopes. 2026. Next Generation Wearable Haptics Should Balance Virtual & Real-world Fidelity. In *Proceedings of the 2026 CHI Conference on Human Factors in Computing Systems*. ACM, Barcelona, Spain, 1–19. doi:10.1145/3772318.3790996

[36] Haruya Uematsu, Masaki Suzuki, Yonezo Kanno, and Hiroyuki Kajimoto. 2016. Tactile Vision Substitution with Tablet and Electro-Tactile Display. In *Proceedings, Part I, of the 10th International Conference on Haptics: Perception, Devices, Control, and Applications - Volume 9774 (EuroHaptics 2016)*. Springer-Verlag, Berlin, Heidelberg, 503–511. doi:10.1007/978-3-319-42321-0_47

[37] Keigo Ushiyama and Pedro Lopes. 2023. FeetThrough: Electrotactile Foot Interface that Preserves Real-World Sensations. In *Proceedings of the 36th Annual ACM Symposium on User Interface Software and Technology (UIST '23)*. Association for Computing Machinery, New York, NY, USA, 1–11. doi:10.1145/3586183.3606808

[38] Sebastian Vizcay, Panagiotis Kourtesis, Ferran Argelaguet, Claudio Pacchierotti, and Maud Marchal. 2023. Design, evaluation and calibration of wearable electro-tactile interfaces for enhancing contact information in virtual reality. *Computers & Graphics* 111 (Apr 1 2023), 199–212. doi:10.1016/j.cag.2023.01.013

[39] Haokun Wang, Yatharth Singhal, Hyunjae Gil, and Jin Ryong Kim. 2024. Fiery Hands: Designing Thermal Glove through Thermal and Tactile Integration for Virtual Object Manipulation. In *Proceedings of the 37th Annual ACM Symposium on User Interface Software and Technology (UIST '24)*. Association for Computing Machinery, New York, NY, USA, 1–15. doi:10.1145/3654777.3676457

[40] Haokun Wang, Yatharth Singhal, Hyunjae Gil, and Jin Ryong Kim. 2024. Thermal Masking: When the Illusion Takes Over the Real. In *Proceedings of the CHI Conference on Human Factors in Computing Systems*. ACM, Honolulu HI USA, 1–16. doi:10.1145/3613904.3641941

[41] Anusha Withana, Daniel Groeger, and Jürgen Steimle. 2018. Tacttoo: A Thin and Feel-Through Tattoo for On-Skin Tactile Output. In *Proceedings of the 31st Annual ACM Symposium on User Interface Software and Technology (UIST '18)*. Association for Computing Machinery, New York, NY, USA, 365–378. doi:10.1145/3242587.3242645

[42] Vibol Yem and Hiroyuki Kajimoto. 2017. Wearable tactile device using mechanical and electrical stimulation for fingertip interaction with virtual world. In *2017 IEEE Virtual Reality (VR)*. 99–104. doi:10.1109/VR.2017.7892236

[43] Hyung Ii Yi, Hojeong Lee, and Sang Ho Yoon. 2024. ThermicVib: Enabling Dynamic Thermal Sensation with Multimodal Haptic Glove for Thermal-Responsive Interaction. In *2024 IEEE International Symposium on Mixed and Augmented Reality (ISMAR)*. 614–623. doi:10.1109/ISMAR62088.2024.00076